Written by R. Scot Foss, Plant Air Technology
Wednesday, 01 August 2001 08:22

Data from more than 250 plants show how compressed air energy may be distributed among key usage categories. Use this information to help decide where energy management solutions should be applied first.Although compressed air systems generally are the third highest energy user in an industrial plant, they represent the number one opportunity for both energy and operating cost reductions.

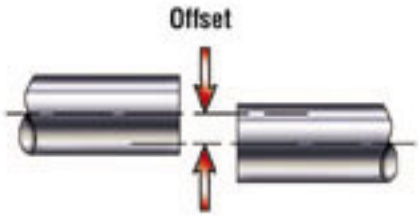

Fig. 1. Offset misalignment

Compressed air systems convert electrical work energy to pneumatic work energy at the point of use. All elements of this process need to be managed efficiently. The optimum process would produce one unit of work energy in the form of expanded mass at the point of use for every 8.5 units of compressor input energy. In industrial plant air systems, which represent more than 7.5 percent of the energy used in U. S. industry, there seems to be little understanding or effort made to achieve any level of efficiency other than the occasional attempt to buy the promise of efficiency with new equipment.

The manner in which compressed air is consumed offers a major opportunity for reduced energy and operating costs. Typically, less than 60 percent of the total compressed air consumed contributes directly to the goods and services for which production was intended. Of this 60 percent, more than a third of it is poorly applied.

The net result is that less than 40 percent of the total consumption of compressed air in industrial plants is essential to process results. The balance negatively influences the cost and quality of goods and services produced. The combination of process efficiency and usage of compressed air makes plant compressed air systems one of the most significant economic opportunities in the industrial sector. Despite this reality, compressed air energy has been increasing while the use of all other forms of energy in industry is diminishing.

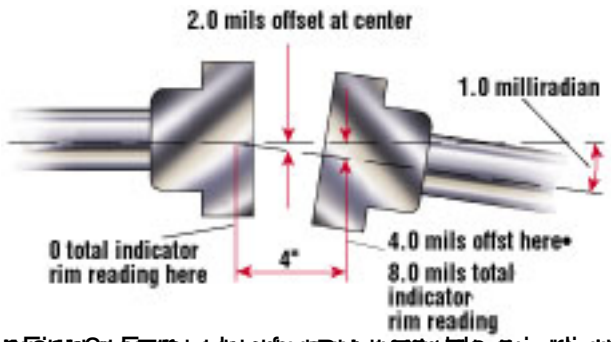

[redacted]

[redacted]

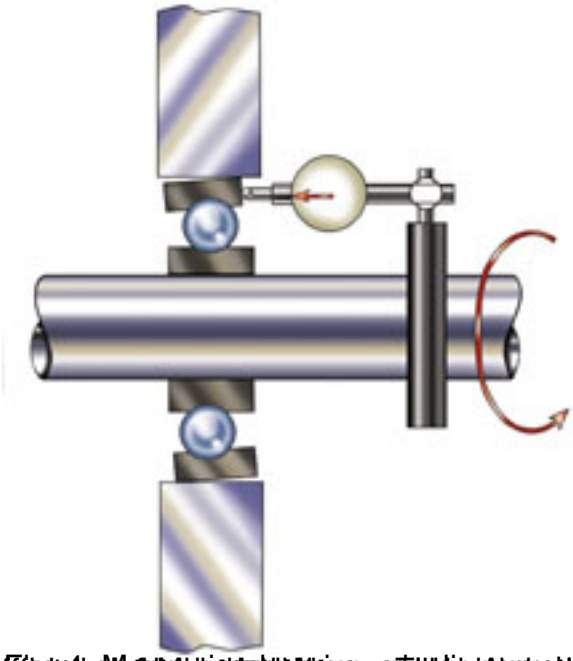

[redacted] **SCREW**

Notes:

1. Stainless steel fasteners can be safely torqued 10 percent above the values in the ta

2. These torques will result in bolt tensions somewhat less than the yield point.

3. The threaded assemblies are assumed to be dry and clean with a resulting torque c

TABLE 1. MAXIMUM ALLOWABLE OFFSET

At center, mils	Speed, rpm
5.0	600
4.0	900
3.0	1200
2.0	1800
1.0	3600
0.5	>4000

TABLE 2. MAXIMUM ALLOWABLE ANGULARITY

Mils/in. or milliradians	Speed, rpm
2.5	600
2.0	900
1.5	1200
1.0	1800
0.0	3600
0.25	>4000

TABLE 3. ACCEPTABLE RACE RUNOUT, MILS/IN. (REFERENCED TO ROTATING

Bearings	mils/in.
Ball bearings	2.0
Cylindrical roller bearings	1.0
Plain bearings	1.0
Plain thrust bearings	0.5