Written by MT Staff
Monday, 31 January 2000 08:15

Premature bearing failure is often caused by misalignment. Here is how to check bearing position.

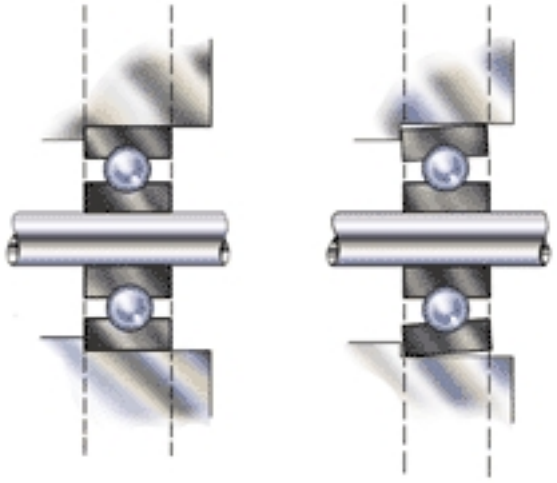

Figure 1. Faces of inner and outer races of aligned bearings are parallel.

An anti-friction bearing is considered aligned when the faces of the outer race and inner race are parallel (Fig. 1).

Alternately, the races of aligned bearings are coaxial. It is surprisingly easy to misalign pressed-in bearings into aluminum housings. Plain bearings also can be misaligned when the bearing axis is not coaxial with the shaft. Thrust bearings are aligned when the thrust face is perpendicular to the shaft's rotating axis.

Why does misalignment matter? The symptoms of bearing misalignment are shock pulses and noise with anti-friction bearings, and rubs and higher temperature on plain bearings. These symptoms are identical to shaft-to-shaft misalignment. Therefore, it is not possible to positively diagnose misaligned bearings from vibration readings alone. A shaft alignment check must be done to eliminate shaft misalignment as a possible defect, and then move on to the bearings.

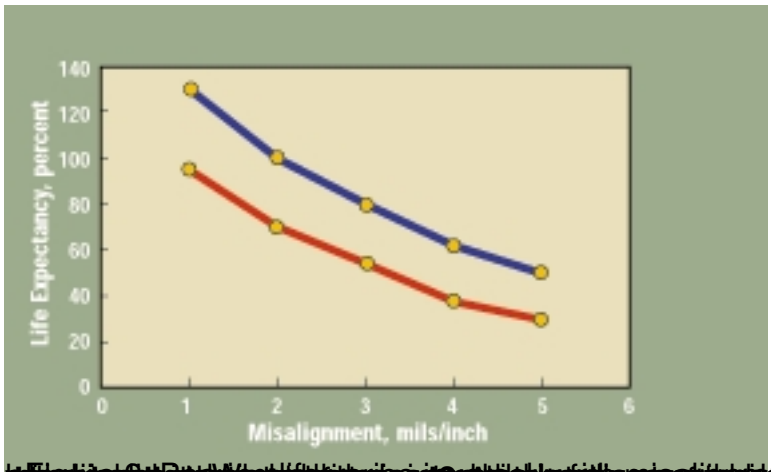
Life Expectancy, percent
140
120
100
80
60
40
20
0
0
1
2
3
4
5
6
Misalignment, mils/inch

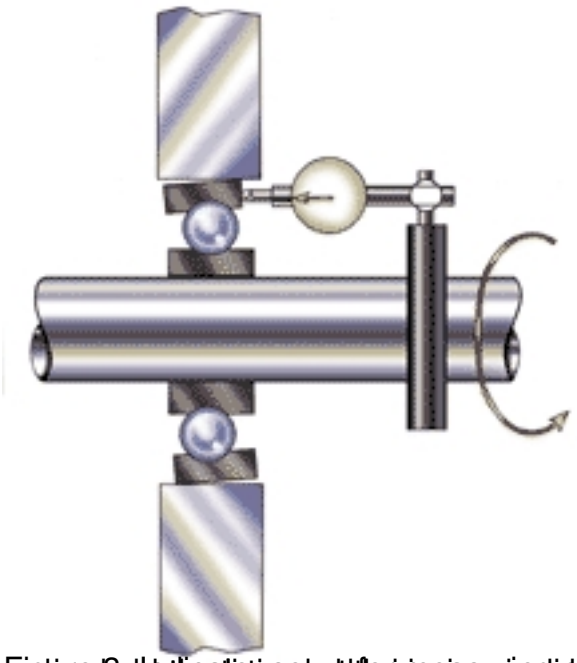

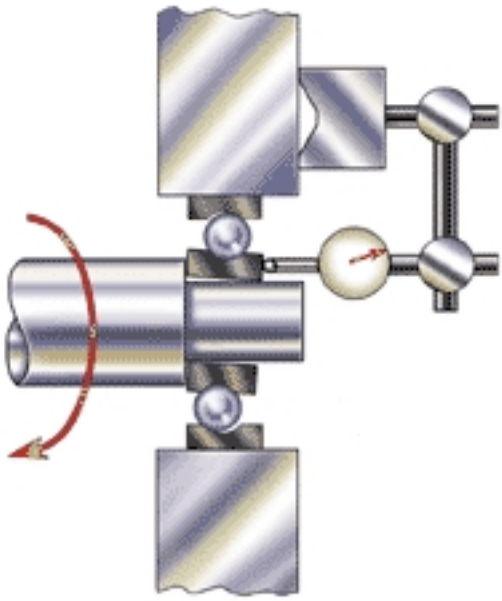

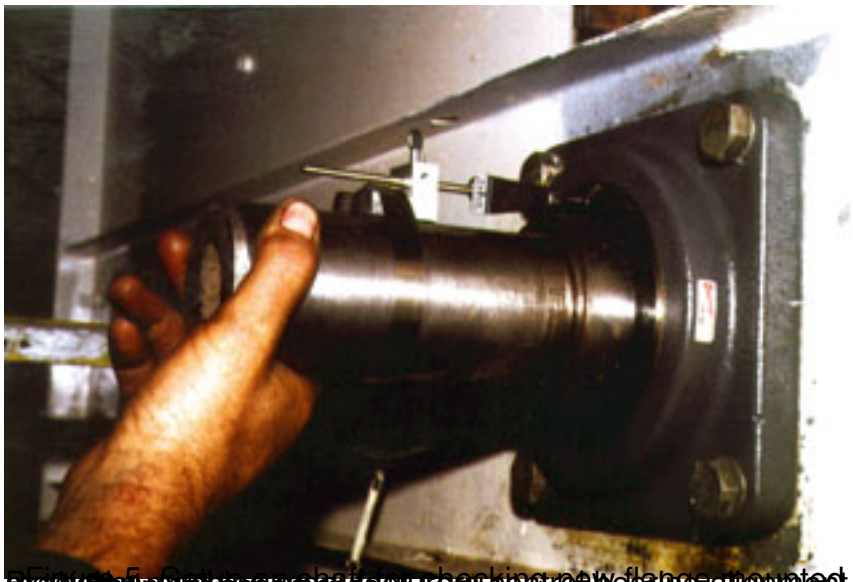

Figure 5. Common shaft and backing new flange mounted bearing after installation on a fan.