Written by Ray Thibault, CLS, OMA I and II and Mark Graham, CLS, CLGS, O'Rourke Petroleum
Sunday, 01 July 2007 00:00

Plant-wide oil mist systems have been in use in numerous reliability-minded refineries and petrochemical plants since the mid-1960s. The 8th (2000) and subsequent editions of the API-610 Standard for centrifugal pumps also have described advantageous application parameters for oil mist. In the United States, Canada, South America, the Middle East and Pacific Rim countries, oil mist lubrication has matured to the point where major design contractors now are specifying these types of plant-wide systems quite extensively.

of pure oil mist *(Source: AESSEALS, Rotherham, UK and Nashville, TN)*

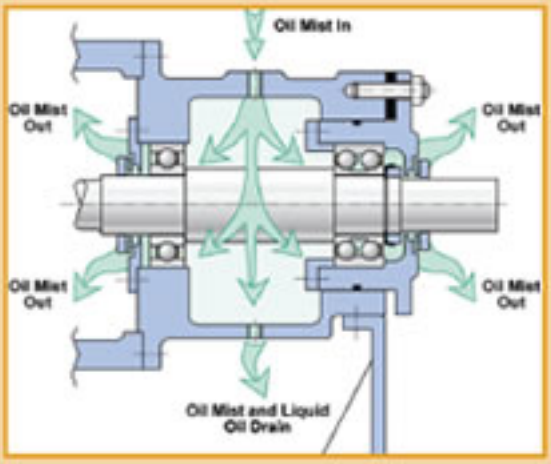

Fig. 3. Optimized "new style" application of pure oil mist *(Source: AESSEAL Ltd, Rotherham, UK and Nashville, TN)*

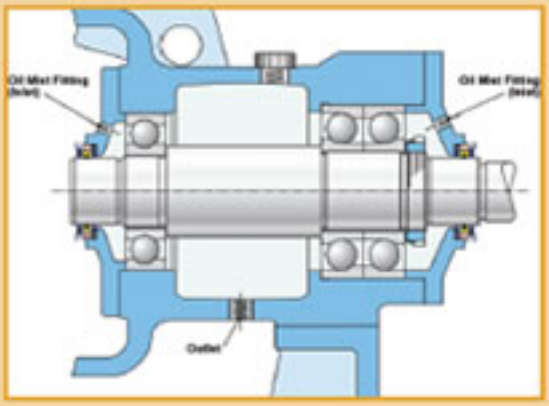

Fig. 4. Magnetically-closed dual-face bearing housing seal *(Source: AESSEAL Ltd, Rotherham, UK and Nashville, TN)*

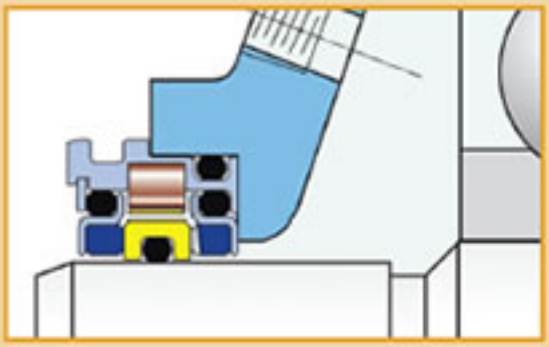

[redacted]

Fig. 5. (left) Large process pump using purge mist and sleeve bearings. Fig. 6. (right) Air blower using purge mist and sleeve bearings *(Source: Lubrication Systems Company, Houston, TX)*

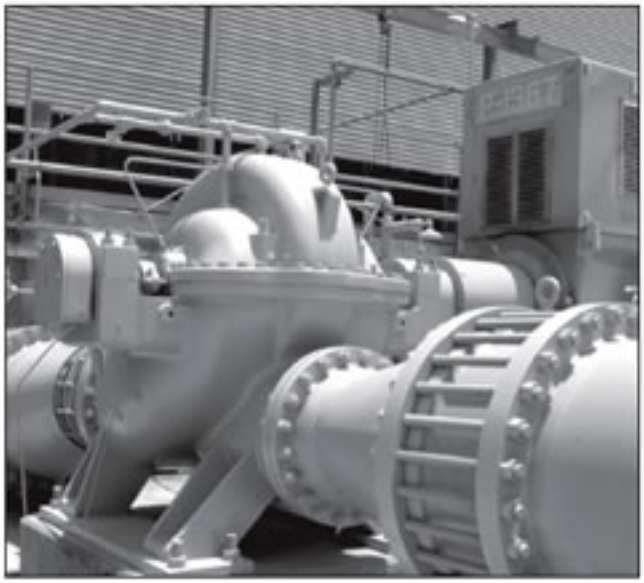

Fig. 7. (left) Pure ("dry sump") oil mist lubricated cooling water pump with rolling element bearings. Fig. 8. (right) Pure ("dry sump") oil mist lubricated process pump with rolling element bearings *(Source: Lubrication Systems Company, Houston, TX)*

[redacted]

Fig. 9. Oil rings in a housing; also note angular contact thrust bearing set *(Source: Lubrication Systems Company, Houston, TX)*

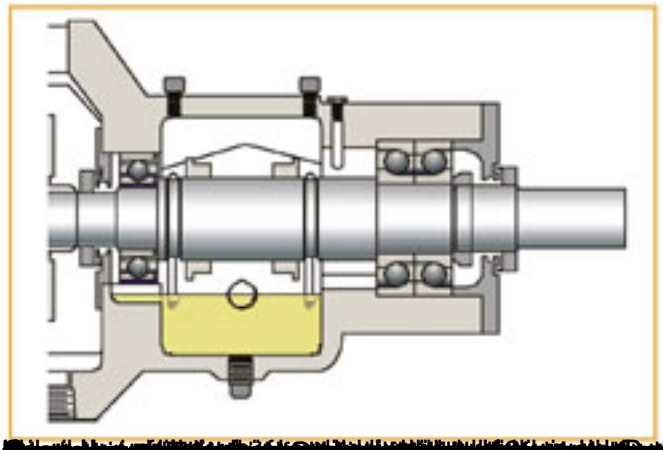

Joomla SEO powered by JoomSEF