Written by Jane Alexander, Editor with Brad Haines, Flowserve
Thursday, 01 May 2008 00:00

No joke, it's getting a lot quieter out there. You, your equipment and your processes have a number of cutting-edge noise attenuation solutions to thank for it.

Uncontrolled noise in process operations is a serious problem. Unresolved issues with noise can lead to health problems, vibration and, in the most extreme cases, equipment damage. All noise attenuation solutions are not created equal, and no one product will be effective in every situation. It is, therefore, important to understand what is creating noise before attempting to fix the problem.

Noise 101

The most significant factor impacting noise is fluid velocity—a significant rise in velocity can produce noise beyond safe limits.

When fluid travels through a conventional singleseated, globe-style valve, a "vena contracta" (point of narrowest flow restriction) develops directly downstream of the narrowest throttling point. At this point the fluid reaches a minimum pressure and maximum velocity that rapidly recovers to a lower pressure than the inlet pressure. When fluid pressure in the valve drops, the fluid velocity rises—this is called the "Bernoulli Principle." As the velocity of the fluid increases, the noise generated by turbulence in the fluid also increases (see Figs. 1 and 2).

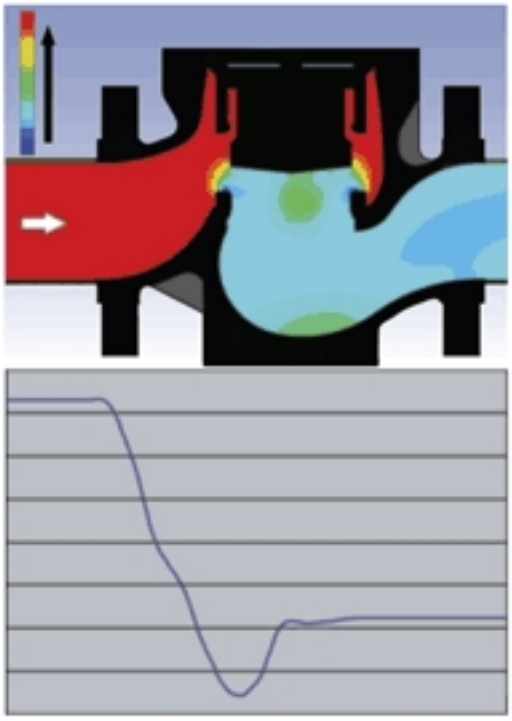

Fig. 1. Pressure drop through a control valve

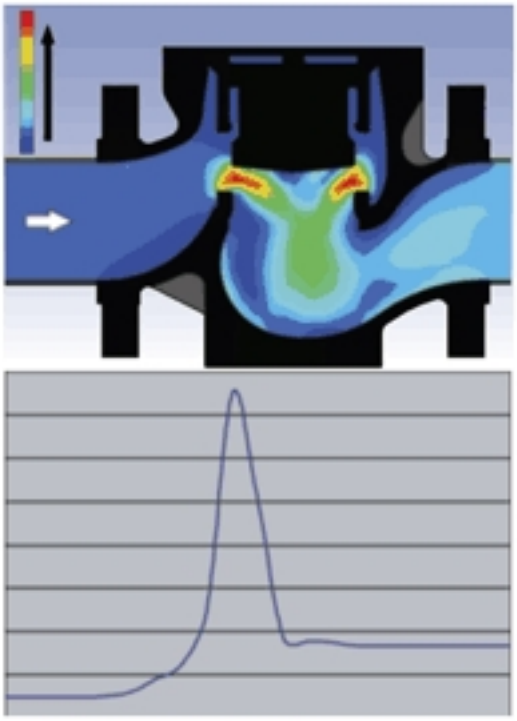

Fig. 2. Velocity through a control valve

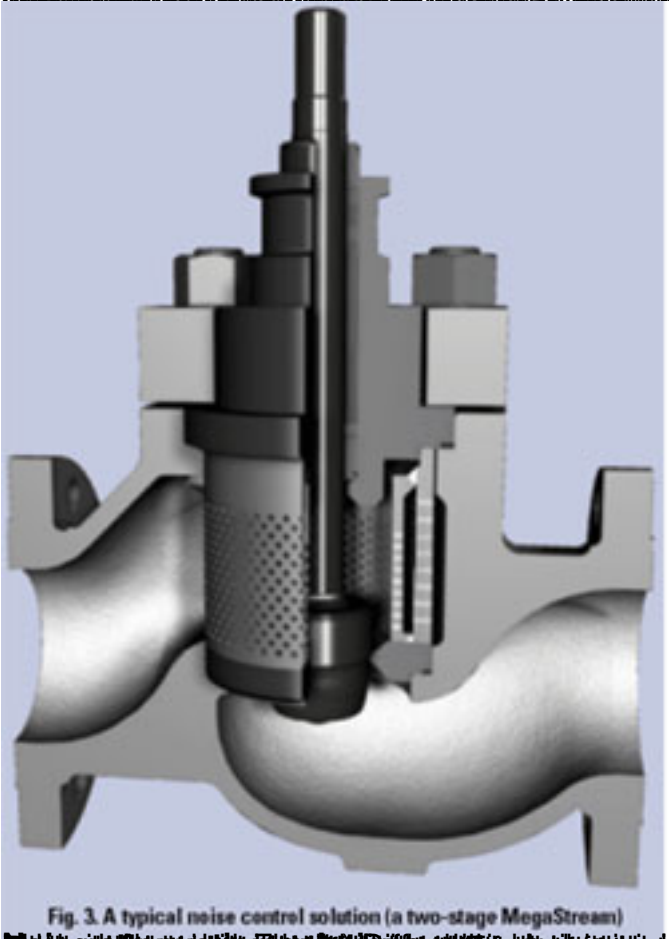

Fig. 3. A typical noise control solution (a two-stage MegaStream)

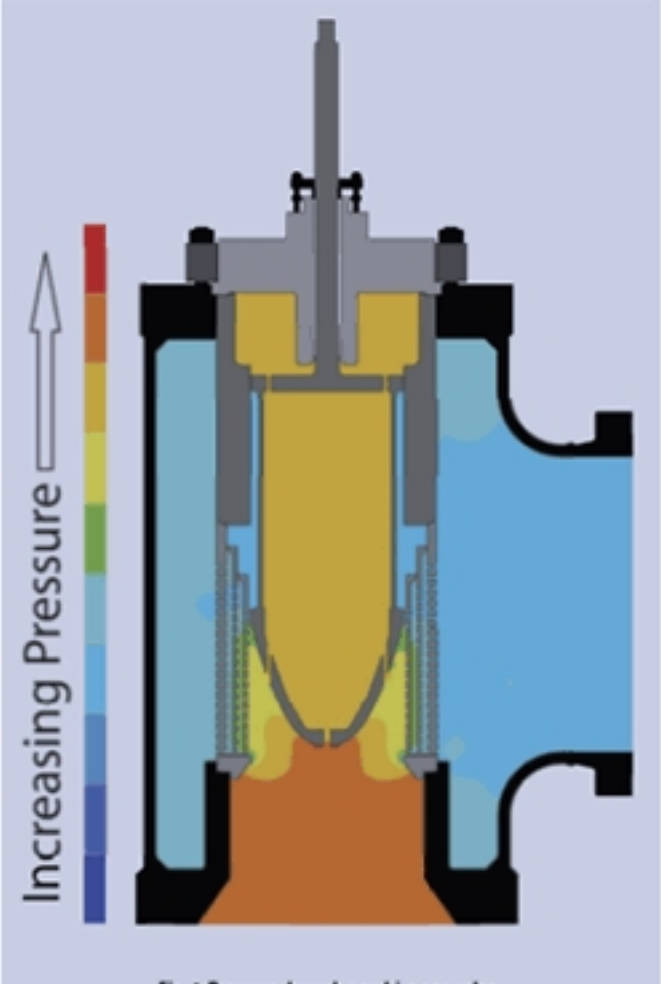

Fig. 4. Pressure through a multi-stage valve

[redacted]

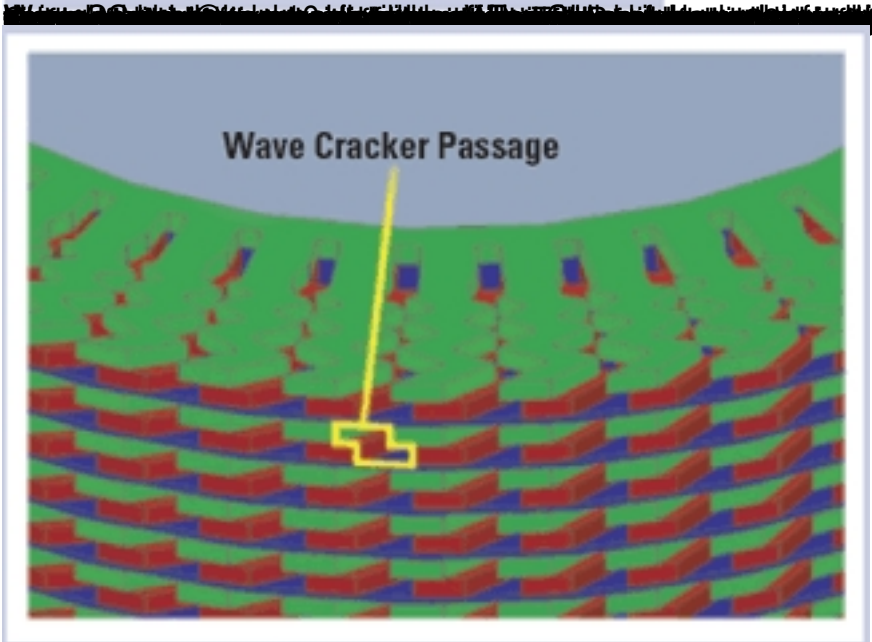

Fig. 5. Wave cracker passages

[redacted]