Written by Ray Thibault CLS, OMA I and II Contributing Editor
Friday, 01 May 2009 10:20

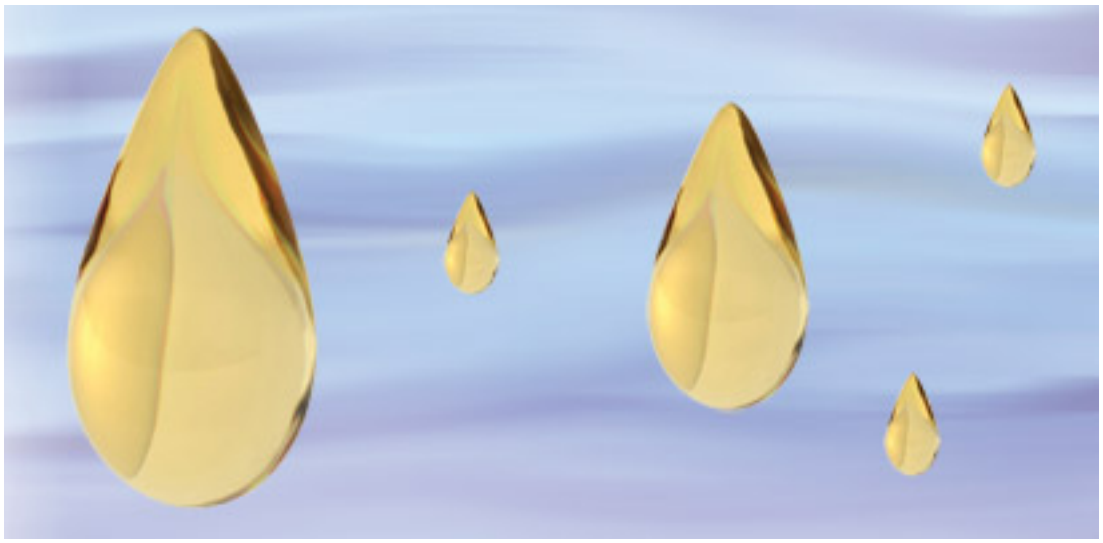

Want the most from a compressed air system? You can't afford to ignore its lubrication concerns.

Compressed air systems, which are found in virtually every manufacturing plant, are used in countless applications. In fact, there are more than 100,000 air compressors in the U.S. today, providing compressed air for tools, pneumatic equipment and instruments, among other things. In some cases, loss of compressed air in a facility can actually cause a plant shutdown. It's no wonder, then, that keeping air compressors running is so critical in plant operation. Doing so, however, calls for special types of lubricants, as many compressors must run in severe environments.

Currently, there are more than 90 suppliers of air compressor lubricants. Proper selection—*and subsequent monitoring*—of the products they offer is essential to the reliability of your equipment.

Air compressor types

Table I lists the various air compressor types and lubricants used.

Type	Lubricated Components	Lubricant Type
Rotary Screw Flooded	Screws, radial and thrust roller bearings and speed gears	Group II, PAO, PAG, and POE ISO VG 32-68
Rotary Screw Dry	Timing gears and roller bearings	AW Group II mineral oils ISO VG 32-68
Reciprocating	Cylinder and frame journal bearings	Mineral oil, diesters, and PAGs ISO VG 100-150
Rotary Vane	Vanes and roller bearings	AW diesters and mineral oils ISO VG 32-150
Centrifugal	Journal bearings and speed increaser gears	Group II, PAO and PAG ISO VG 32

LEGEND

PAO – Polyalphaolefin Synthetic Hydrocarbon

PAG – Polyalkylene Glycol

POE – Polyol Ester

AW – Antiwear Additive

ISO VG – ISO Viscosity Grade

Table I. Air Compressor Types & Lubricants

In the past, reciprocating compressors were used extensively to provide compressed air. These units have been largely replaced by flooded rotary screw compressors—*which currently account for more than 80% of the market*
. A small percentage of rotary vane compressors also are utilized. Centrifugal and dry screw compressors are in service where oil-free air is required. The following discussion will focus on the main compressor types:

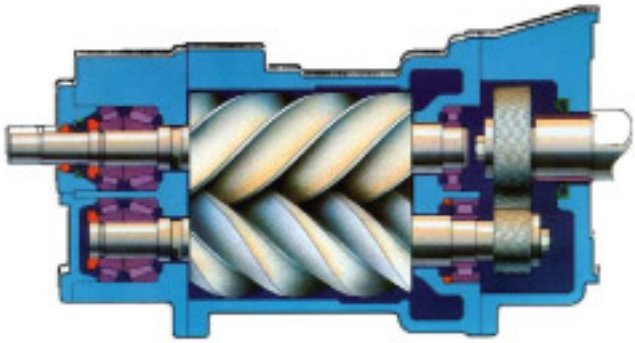

Fig. 1. A flooded rotary screw air compressor *(courtesy Dow Chemical)*

Flooded rotary screw compressors…
Flooded rotary screw type compressors (Fig. 1) are the most common. Compact in size, they run very efficiently and quietly. A single-stage model will produce 100-200 psig of air; with two stages, pressures of 400 psig and a capacity of 1150 cfm can be reached. Sump volumes range from 10-60 gallons, with 15-30 gallons being typical.

Lubricated components, including radial and tapered roller thrust bearings and the helical speed gear, are lubricated separately from the screws where lubricant is injected with the incoming air supply to also provide sealing between the male and female rotors, as well as for cooling and rust protection. Air discharge temperatures are usually 100 F or more over the ambient temperature.

Because of the high oxidative environment consisting of moisture and high temperatures, rotary screw units usually require synthetic lubricants as discharge temperatures approach 200 F. OEMs have their own customized synthetic lubricants, which are supplied for their respective compressors. Many OEMs require use of these lubricants during the warranty period.

Table II. General Numbers for Lubricant Life Based on Temperature

Lubricant Type	Discharge Temperature, F	Estimated Life, Hours
Group II mineral oil	185	1000
	200	500
PAO	185	8000
	200	8000
	210	6000
Diester	185	8000
	200	8000
	210	6000
PAG	185	8000
	200	8000
	210	4000
POE	185	16,000
	200	12,000
	210	8000
	220	8000

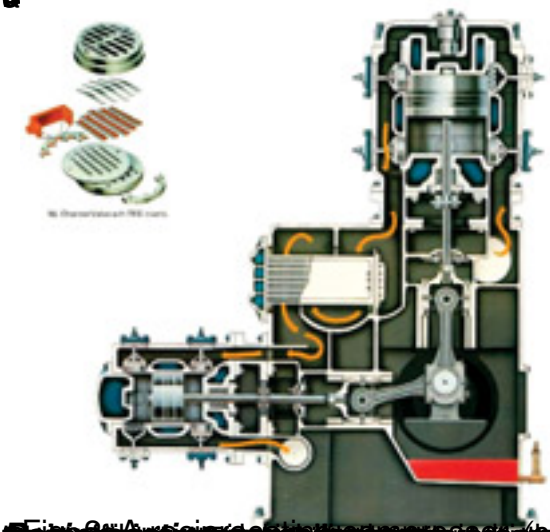

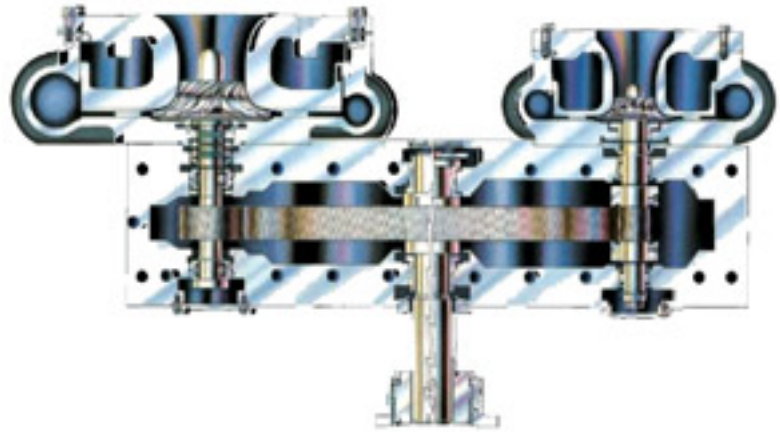

[illegible] lubricants except PAGs and silicones

Table III. Base Stock Composition of Rotary Screw & Centrifugal Compressor Oils for Atlas Copco, Sullair and Ingersoll Rand Units

OEM	Lubricant	Base Stock Type	ISO VG
Atlas Copco	Roto Injector	Group II mineral oil	46
	Roto Extend	PAO	46
	Roto Extreme	POE	46
Sullair	Sullube 32	PAG/POE	39 cSt
	SRF 1-4000	Group II/Diester	32
	SRF 2-8000	PAO	32
	AWF	Group II	32
	24 KT	Silicone	24 cSt
Ingersoll Rand	SSR Ultra Coolant	PAG/POE	55 cSt
	Ultra Plus Coolant	POE	32
	Techtrol Gold	PAG/POE	~32 cSt

[illegible] Rotary Screw & Centrifugal Compressor Oils For Atlas [illegible] degradation [illegible] removal [illegible] presence of water to form sludge

Table IV. Base Stock Composition of Rotary Screw & Centrifugal Compressor Oils for Palatek, Quincy and Gardner Denver Units

OEM	Lubricant	Base Stock Type	ISO VG
Palatek	Palasyn	PAO	46
	Pallube	PAG/POE	32
	Palaextra	PAO/POE	46
Quincy	SYN Plus	PAO	46
	SYN HP	POE	46
	SYN PG	PAG/POE	46
Gardner Denver	AEON BIO	POE	46
	AEON 9000	PAO	46
	AEON TH	POE	46
	AEON 4000	Group II	46
	AEON 800	Group II	68
	AEON PG	PAG/POE	46

4. [redacted] of Rotary Screw & Centrifugal Compressor Oils for Palatek,
5. [redacted] air compressors

Synthetic Air Compressor Fluid	Price, $/gallon in Five Gallon Pails
PAO	$42
Diester	$41
PAG/Ester	$52
POE	$56

Fluid Type	Initial Acid #	Caution	Condemning Limit
PAO	0.1	1.1	2.1
PAG/Ester	0.1	1.1	2.1
POE	0.2	1.2	2.2

Fluid Type	Viscosity - Caution	Viscosity - Condemning	pH - Caution	pH - Condemning
PAO	+/- 10%	+/- 20%	5.0	4.5
PAG/POE	+/- 10%	+/- 20%	5.0	4.5
POE	+/- 10%	+/- 20%	5.0	4.5

For more info, enter F at www.LMTfreeinfo.com

Joomla SEO powered by JoomSEF