Written by Heinz P. Bloch, P.E. Contributing Editor
Thursday, 01 November 2007 00:00

If you ever have dealt with small steam turbines, chances are that issues of bearing selection and lubrication had to be addressed. Among these are issues of rolling element bearings vs. sleeve bearings, types of lubrication and application of lubricants. Even the definition of a turbine's suitability for a certain service is often debated and using such terms as "General Purpose" and "Special Purpose" begs definition.

While a common differentiation of general purpose (GP) and special purpose (SP) steam turbines is indeed made at 1 MW, process industry users frequently have deviated from this rather arbitrary rule. Reliability professionals often have specified general purpose turbines if there were some spare capacity or if there were redundancy in the form of installed spares, or nonessential services, or moderate speed and so forth. A good example is a plant where there were several 2 or 3 MW GP steam turbines driving cooling water pump sets. Here, it would be very uneconomical—even wasteful—to insist on SP turbines.

Examples in the opposite direction exist as well. Take, for instance, a 600 kW steam turbine selected to drive a small, but essential, process gas compressor. In this situation, a special purpose steam turbine would be specified for very good reasons. It will cost more than the GP version, but it will have a lubrication system that makes it less prone to cause unscheduled outages.

Keep hybrids in mind

Hybrids are a composite of GP practice and SP practice. Packaged systems may have to be upgraded by identifying the (potential) weak link(s) and specifying certain elements that are otherwise primarily associated with GP or, conversely, SP equipment.

Competent engineers frequently will specify hybrid support systems, such as lube oil consoles (Fig. 1), electronic governors, oil mist lubrication (Fig. 2) or oil flinger disks, instead of potentially unstable and risk-inducing slinger rings, etc. Even the rather customary carbon seal rings that have been supplied for seven or more decades with GP steam turbines are due for an upgrade. Forwardlooking users are now often replacing carbon rings with high-temperature mechanical seals and, in doing so, reduce both operating and maintenance expenditures.

Best judgment

The best judgment of competent reliability engineers uses lots of experience and sound

life-cycle cost assessments. The practices endorsed by these engineers often lead established industry practices and written standards by a decade.

Sound judgment recognizes that the life cycle of a machine is inevitably influenced by operating and maintenance practice. These practices have been the subject of thousands of written pages in books and articles. Moreover, they vary from location to location and are difficult to generalize across the board. While the practitioners may be disinclined to share this information, we nevertheless can observe what true reliability professionals do: They look at the specifics of each case and carefully weigh the alternatives. *They will then submit their findings to responsible management in writing.*

Lubrication frequency and oil analysis

Real-world questions…

Questions on re-lubrication frequencies and how these are to be determined recently have been explored by some readers, as have issues relating to fitness for service or extending the life of existing oils. Of course, the major lube suppliers provide products and services—*either directly or through contract distribution channels*
. They also offer lube oil analysis as part of the supply contract.

Some plant engineers seem to have engaged the services of major and minor suppliers without regrets, and they have pointed out reductions in both lube amounts and the number of different oil types being inventoried. One of our readers noted that his company is now using a single or a couple of oil types and maybe just one grease. "Yet," he went on to write, "I'm not so sure this consolidation is the best way, as you could end up being held to ransom, and maybe not get the best properties of oil for expensive equipment. I would be interested to hear your opinion on this subject."

Fig. 1. Packaged API-Style lube oil console for turbomachinery *(Source: Lubrication Systems Company, Houston, TX)*

[illegible]

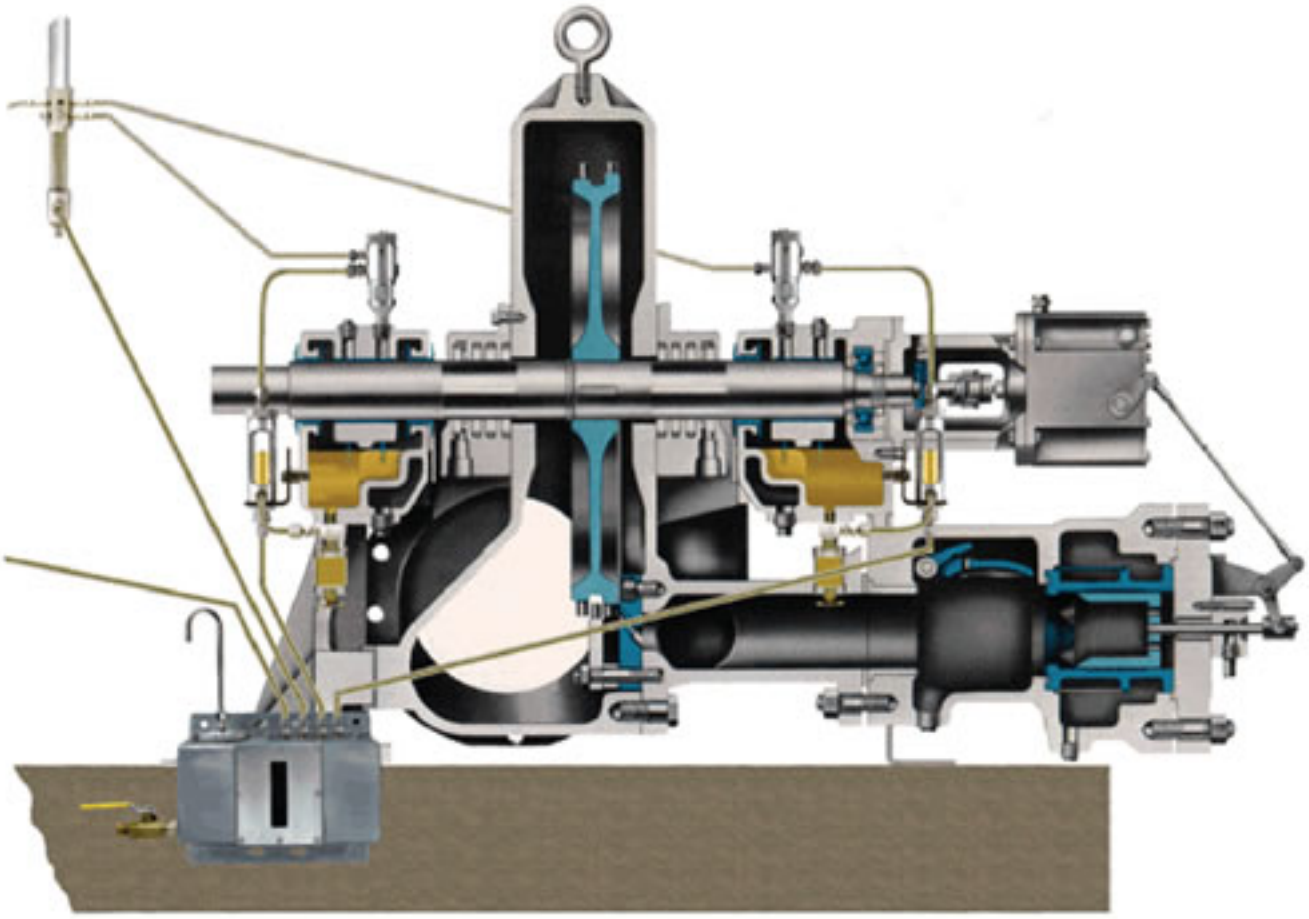

Fig. 2. Small steam turbine with pure oil mist lubrication *(Source: Lubrication Systems Company, Houston, TX)*

hpbloch@mchsi.com