Written by C. David Larson, A. W. Chesterton Co.
Monday, 18 October 2010 07:59

**Internal chain wear can be a killer. You can't afford to ignore these tips for proper lubrication.**

They're some of the most unseen, unsung heroes in a production process. Chains (typically of the metal-pin-and-bushing design) are used throughout industry, primarily for the transmission of power or transfer of goods. Sadly, proper lubrication practices are often disregarded when it comes to these workhorses, leading to shortened chain life and increased costs. Here are some tips to ensure that these critical links keep moving your operations in the direction of profitability.

**The challenges**

Poor chain lubrication may be indicated by noise, stiffness or a high rate of what is often referred to as "chain stretch" (i.e., elongation of the chain resulting from internal wear on the pin and bushing). The correct time to replace a chain is frequently overlooked. In many cases, the first notice of wear is when the chain breaks. At this point, the elongation is excessive, leading to additional costs—*such as those related to drive-sprocket damage*. Stretch or elongation of 2.5% to 3% is generally considered the limit. While chains should be replaced once they reach this limit, often they aren't. Instead, their tensioning mechanisms might be adjusted or some links removed. These are not true "repairs," though, as the pins continue to wear. In time, the chain breaks.

You can easily measure the amount of stretch with a chain elongation gauge. This simple tool helps "predict" the optimum time for chain replacement—*before collateral damage is done or failure occurs.*

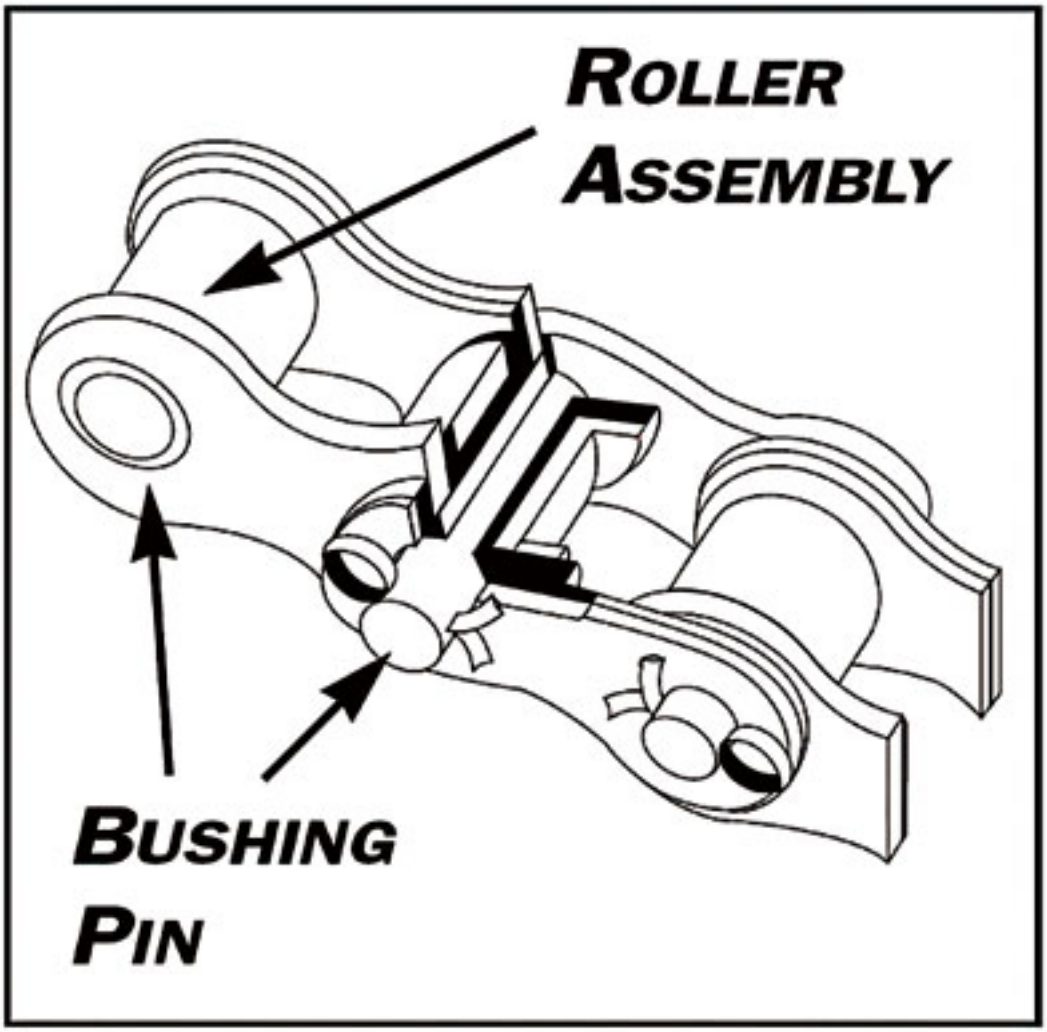


*The metal-pin-and-bushing design is the most common chain used in industry, primarily for the transmission of power or transfer of goods.*

*(CAUTION: The primary wear on a chain occurs when there is relative motion between the pin and bushing. In some applications, this occurs on only a portion of the chain. This is the area that should be checked. An example would be a chain hoist, wherein some of the chain is always in tension and does not experience relative movement. This section would normally see limited wear and should not be the location chosen for elongation measurement. )*

**Effective lubrication**

While there are many causes of chain failure, the most common is internal wear of the pin and bushing—*parts that are fit to close tolerances*. This is where the chain flexes and also where the load is carried. For all practical purposes, this can be considered as the bearing area of the chain; as such, it needs periodic re-lubrication. In times past, chains were often removed from a machine, solvent-cleaned and placed into a bath of hot oil. While effective, this procedure is generally not practical.

A chain elongation gauge helps “predict” the optimum time for chain replacement, before collateral damage is done or failure occurs.

In order to lubricate a chain effectively, the lubricant must have several key properties: The critical requirement is the ability to penetrate to the interior of the chain to lubricate between the pin and bushing. Most chains are relatively static, preventing any possibility of creating a hydrodynamic lubricant layer. To prevent excessive metal contact and wear, the lubrication should possess high film strength. In addition, the lubricant must be able to remove built-up residues from the inside and outside of the chain. For conditions such as water, high temperature or load, the lubricant must have the ability to remain in place and maintain a lubricating film.

Lubrication methods for chains fall into three main categories: Manual, semi-automatic and automatic (see Table I). The size, speed and operating conditions of chains often determine the best application method.

| Method of Lubrication | Non-Automatic | | Semi-Automatic | Automatic | | |
|---|---|---|---|---|---|---|
| Application of Lubricant | Manual | Manual | Drip Cup | Splash | Oil Disc | Forced Lubrication |
| | Brush or Oil Can | Pressure Lubrication | Contact Brush, Direct Dip | Chain Dips into Oil | Oil Disc Throws Lube up on Chain | Pump Sprays Oil on Chain |
| | | | 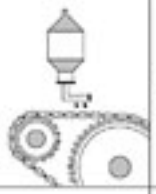 | | | 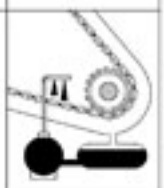 |
| Kind of Equipment | Conveyors, Elevators, Drives | Conveyors | Conveyors and Elevators<br>Drive in Low Horsepower and Speed Range | Drives – Low to Moderate Horsepower and Speed | Drives – Moderate to High Horsepower and Speed | Drives – High Horsepower and Speed |

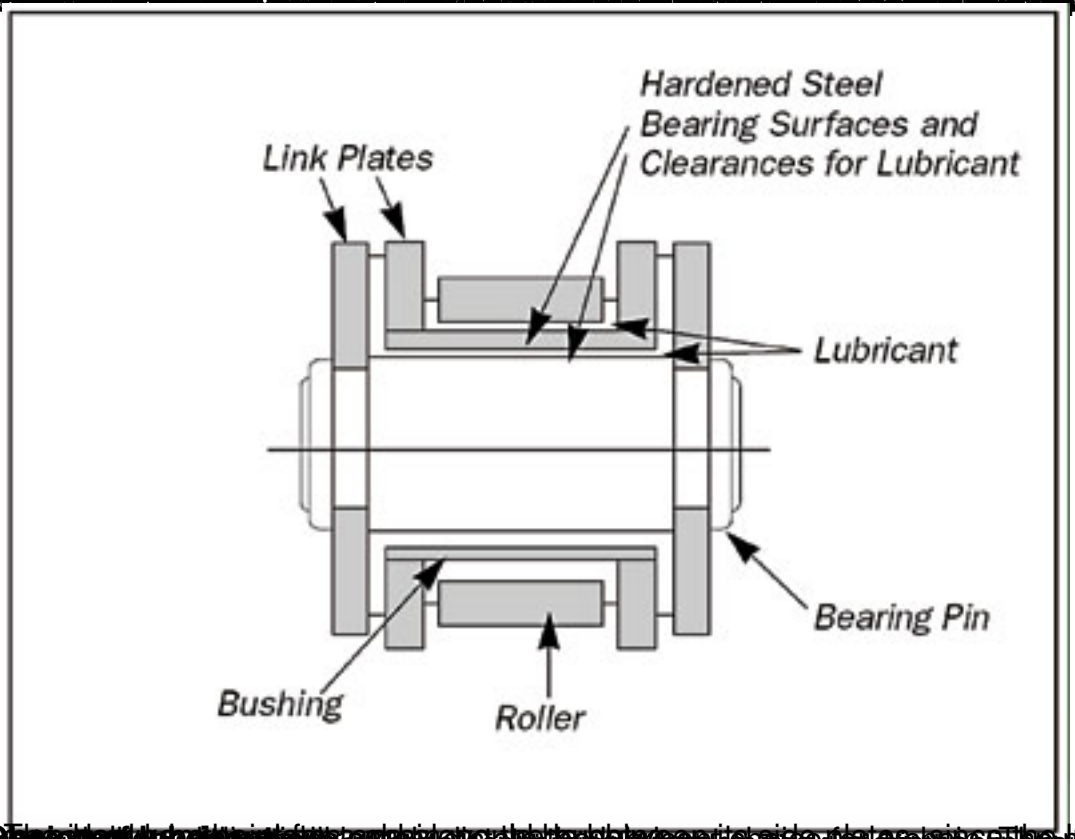


larsond@chesterton.com