Capacity Controller For Refrigeration Compressors

The AK-PC 781 Multifunctional Pack Controller by Danfoss makes it easy to set up energy-efficient capacity control of refrigeration compressors and condensers with modular hardware and flexible software that extends as system requirements grow or change. The controller allows users to configure inputs and outputs for sensors, switches and relays with a modular controller, and can also provide oil management, heat recovery and CO2 gas pressure control. Controller programming is easily accomplished with a PC using AK-Service Tool software.

Danfoss LLC
Baltimore, MD

Reliable Tapered Roller Bearings

Baldor Electric Company's Dodge Type EXL tapered roller bearing provides both misalignment and expansion capability, while maintaining industry-standard Type E mounting dimensions. Its design incorporates a cartridge-style inner unit into a split ductile iron housing. The split-housing design allows the inner unit to swivel freely in the housing, allowing up to +/- 4 degrees of static misalignment. The totally sealed inner unit incorporates the Dodge XTS triple-lip seal for

increased protection in harsh environments.

Baldor Electric Co.
Fort Smith, AR

Portable, Easy-To-Use Borescopes

The VJ-Advance borescopes from RF System Lab offer four-way articulation, an easy-to-use joystick control and a medical-grade camera that takes video and still images. The portable, battery-powered units weigh only 23 ounces and have the rugged construction required for industrial remote visual inspection or commercial RVI work. The borescopes also feature a flip-up 3.5” monitor, removeable MicroSD memory and a hard-shell carrying case.

RF System Lab
Gaylord, MI

Inline Machine Tool Fluid Filtration And More

According to Eriez, its fully automated mobile SumpDoc™ provides inline coolant filtration and replenishment for machine tools while they run. The first phase of its three-phase process vacuums chips and sludge from dirty sump coolant at a rate of 85 GPM per minute (50 microns). Fine solid particulate is then filtered to 3-5 microns and tramp oils are removed to less than 0.5% at flow rates of 90-120 GPH. Once clean, the fluid is analyzed and the SumpDoc is set to deliver a lean, medium or rich coolant mix back to the sump. Depending on the regularity of cleaning, a 200-gal. sump typically can be processed in about two hours. Mounted on a battery-powered pallet jack, the unit comes with onboard hookups and extensions for compressed air, plant water and 120V, single-phase electric.

Eriez Manufacturing Co.
Erie, PA

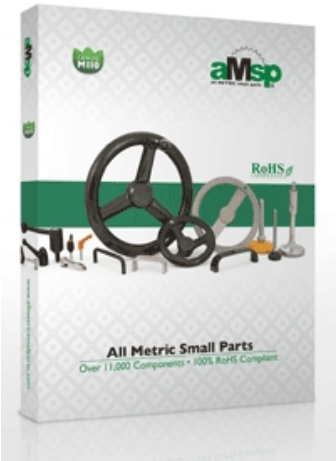

Catalog Full Of RoHS-Compliant Components

A revamped, 640-page hardware catalog from All Metric Small Parts features over 11,000 100% RoHS (Restriction of Hazardous Substances)-compliant components. The catalog, identified as M110, features an expanded 141-page section of quality industrial leveling foot mounts. Of special interest is a series of clamping adjustable levers offered in a wide variety of colors to complement specific applications. The catalog also offers a useful technical data section.

All Metric Small Parts
New Hyde Park, NY

Torque Limiters For High-Torque Applications

According to R+W Coupling Technology, use of its ST torque limiters can help minimize machine downtime due to crashes, and increase the availability and productivity of a plant's machines. The limiters are designed for high-torque applications, using individual torque modules evenly spaced around the circumference of the coupling. The limiters are based on a spring loaded, ball-detent design. The line is backlash-free and torsionally rigid with a compact, simple design **.**

R+W Coupling Technology
Bensenville, IL

Updated Software For Testo Thermal Imagers

Testo Thermal Imaging has released its next-generation thermal imaging software, IRSoft 3.1 sp3, the third such upgrade made available by the company in the past year. The software is free to all users of Testo Thermal Imaging Products, and it is backwards compatible with all of the company's imagers. New reporting features include a Word-compatible file format, the addition of 12 user-customizable data fields and customizable reporting templates. Other benefits include upgrades to radiometric video capture and advanced memory management.

Testo, Inc.
Sparta, NJ

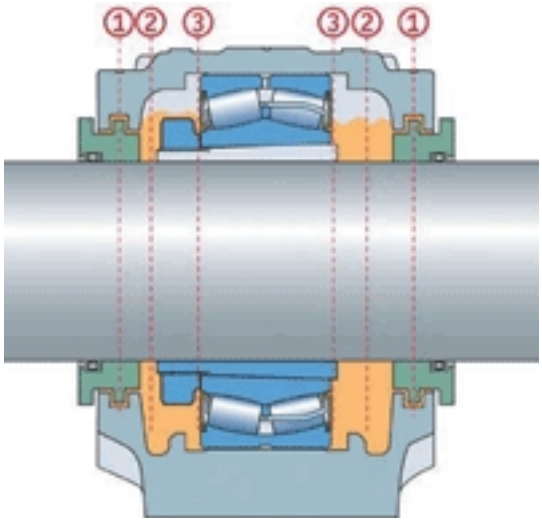

Bearing Protection For Harsh Environments

SKF's three-barrier solution for harsh operating environments is a cost-effective, environmentally friendly bundle of products that can extend bearing service life without compli-cated sealing arrangements. The solution protects the bearing and can help eliminate

contamination during both assembly and in service. Included in the kit are a housing, sealed spherical roller bearing, adaptor sleeve, spacer ring (if required), stabilizing ring, two PosiTrac Plus seals and mounting instruction s.

SKF
Lansdale, PA