Written by MT Staff
Friday, 01 October 2004 08:21

Impact transmitters are a new-old way of protecting reciprocating machines from catastrophic failure and reducing the cost of repairs. Reciprocating machines do not follow the usual rules for condition monitoring of rotating machines. Impact transmitters take advantage of reciprocating machine failure modes and are saving machines, money, and reputations.

Anyone listening carefully to operating machines recognizes a number of characteristics. There is the steady hum of a rotating machine at a tone usually determined by shaft rotational frequency. The tone may be pure, at a single frequency, or contain overtones. It may be modulated, varying in intensity due to an interaction with another component or machine. Cavitating pumps generate an irregular sharp bubbling sound because that is what is happening inside the pump.

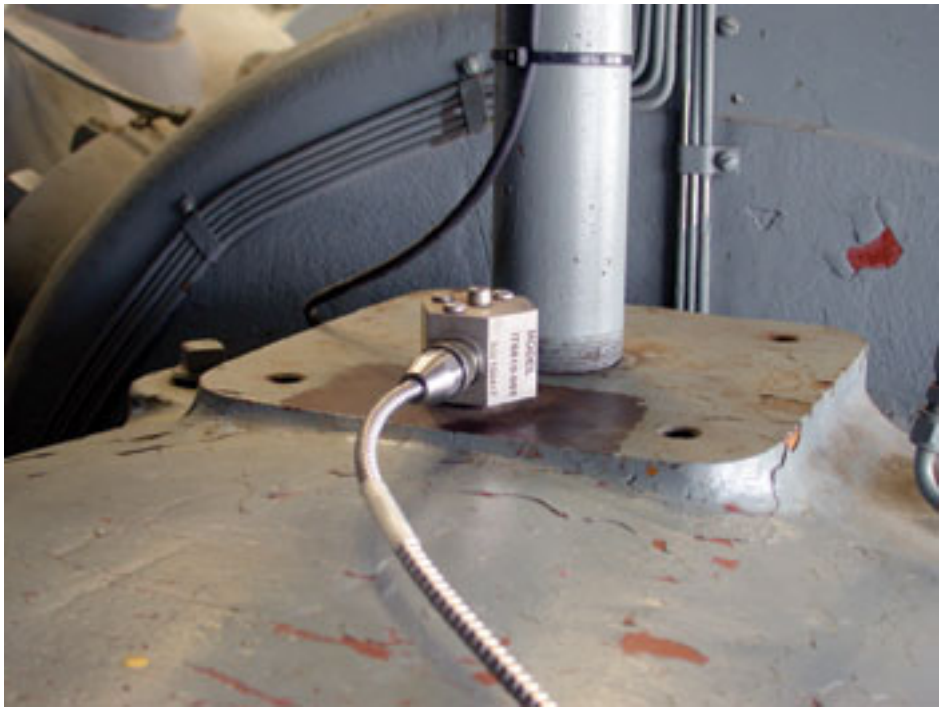

Fig. 1. The impact transmitter can be mounted on compressor crosshead.

Vibration monitoring limitations

Traditional vibration analysis focuses primarily on the steady tones generated by rotating equipment. In some cases, special accommodations have been added to identify impact events such as the inaudible and audible clicks generated by flaws on a rolling element bearing.

Although these transient clicks and impacts may be quite clear to a human ear, they typically

do not constitute a significant portion of the total energy of the overall signal sensed by a vibration transducer. Thus, while the characteristics can be heard and seen by a human, they will not appear in a conventionally detected level displayed on a vibration monitor. That is the primary limitation of conventional vibration monitoring as a means to identify the condition of a reciprocating machine.

Components in a reciprocating machine can be compared to many people talking in a noisy room. While the crankshaft is going around, rods are going back and forth reversing on every stroke. Tones may be present but they are typically not primary condition characteristics.

Squeaks, ticks, knocks, and other periodic impact type sounds are generated as components move. Clearances click and should not bang as forces reverse direction. There will be whooshing noises from valves opening and closing as well as flow noise through open valves. Examples of anomalies manifested as impact or spike type transients are knocks from loose parts and liquids in gas, clicks as cracks come together and open (often observed visually as bubbles or oil weeps), and hissing flow noise through closed valves and squealing gasket leaks.

This simplified description shows that in terms of vibration and sound, a reciprocating machine is quite different and far more complex than a rotating machine. For this reason, conventional vibration monitoring and analysis techniques that work for rotating machines do not work well on reciprocating machines. There is simply too much din and transient activity in a sound or vibration signal to accurately identify what a single component is attempting to say.

If the vibration system is set to a high sensitivity in order to recognize small changes, false trips are likely. If the sensitivity is set too low, the monitored machine may suffer extreme damage without a trip from the monitoring system.

A different approach

Instead of looking at steady state tones, it was suggested, why not build a monitoring strategy that is sensitive to the impacts generated by reversals unique to reciprocating machines? With loosening bolting and clearances, leaking valves and other common problems in a reciprocating machine identified by impact type events, why not use this information? When ignored, conditions identified by impacts only get worse.

As the thought process evolved, it seemed logical that a reciprocating machine in normal condition should have some level and pattern of impacts. Any deviation, such as bolts or fits loosening and internal leakage, should produce a measurable change in the pattern of amplitude and the number of impacts in a given time period. The theory was tested and it worked well in practice.

Fig. 2 . To meet Div 1 area classification, the impact transmitter is installed inside this explosion-proof housing. The transmitter has a Class I, Div 2 rating.

Impact transmitters in action

A major gas plant in southern California has five 5500 hp V-16 engine-driven compressors. All were equipped with conventional vibration monitors. About a year ago, one unit suffered a catastrophic rod failure where the vibration monitoring system did not shut down the engine—even though the fractured rod had broken through the crankcase. This disaster was the final straw for a vibration monitoring system that had produced phantom alarms and trips in the past and now had failed to operate when a real failure occurred.

Recognizing that the situation with an unreliable vibration monitor could not continue, the company initiated a search to find something better that would be capable of preventing another expensive failure. As a result of the search, the company installed impact transmitters and embarked on an extensive test program. The test program had two objectives: identify optimum transducer configuration and compare performance to the vibration monitoring system.

With the impact transmitters in place and connected to analog input channels on their PLC, the system was tested with an impact wrench on crankcase through bolts. Plug wires were removed to induce misfiring. The engine was overloaded to about 115 percent. The impact transmitters did not respond to either condition. With deliberately increased valve lash, the impact transmitter tripped—on intake valves only.

Following the test, the company concluded that the impact system offered significantly improved protection compared to conventional vibration monitoring. The system is still under evaluation; however, the phantom alarms and trips have ended, and in one case a bent pushrod was found following warning from an impact transmitter.

This plant is particularly concerned about broken valve keepers. In the past, keepers have broken, allowing the valve to contact the piston with serious damage occurring in less than 5 sec. The impact transmitters are expected to significantly increase protection against this type of failure. There also is concern about link rod failures, when wear increases bolt stress until they break. The company hopes the impact system will recognize this type of wear, and the increasing bolt stress, prior to failure.

Another gas plant in California experienced a similar result. After a diet of valve and power piston parts killed the turbocharger on a large integral gas compressor, the conclusion was clear. There had to be a better way than conventional vibration monitors to protect these expensive machines. Following an extensive test program, impact transmitters were installed as primary protection on approximately 15 gas compressors ranging up to 6000 hp.

Installing better protection appears to have frightened away the valve and piston failure the system was designed to avoid. However, one major save and a number of minor saves have demonstrated the effectiveness of the impact method of protection. The major save occurred when an impact-initiated warning led to the discovery of a cracked crankshaft. In addition to this major save, the plant has experienced instances where impact transmitters have warned of loose bolting, including a rod nut, in time to take corrective action before any damage occurred.

Due to the high vibration environment in which the impact transmitters are installed, the plant is considering safety wiring connectors to prevent loosening and false signals. It also wants to devise a similar method to prevent loosening of the impact transmitter from its mounting.

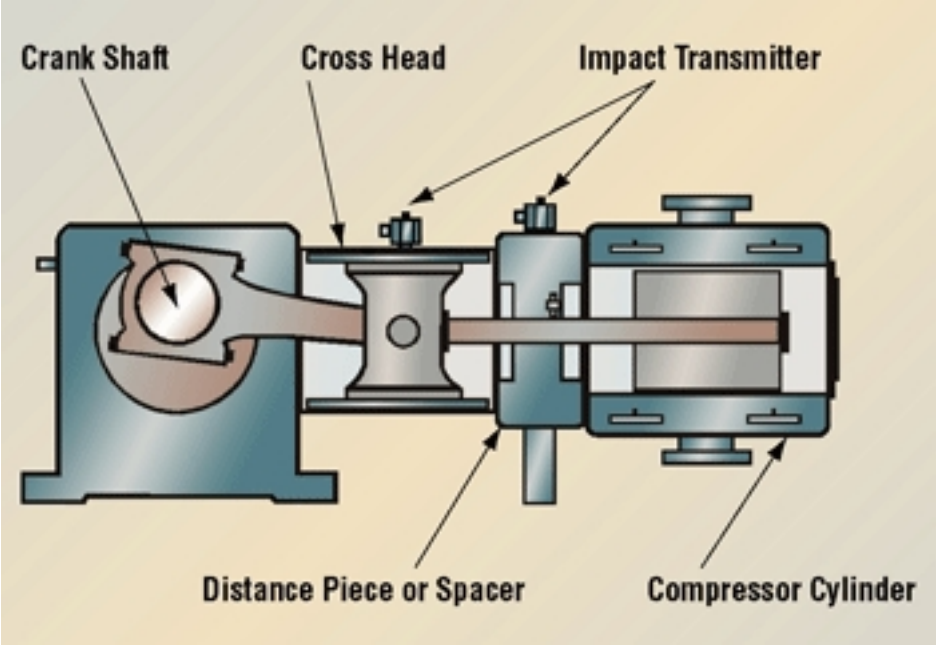

Fig. 3. Typical mounting locations for an impact transmitter. A Texas plant has nearly 100 impact transmitters installed on electric drive CO_2 compressors. These machines range from 2250-8000 hp. In all cases, the impact transmitters are installed on top of the crosshead guide. Since these are relatively new machines, gaskets and bolting have relaxed during initial operation. The impact transmitters caught this condition in plenty of time to fix it before any damage occurred.

In one case, an impact transmitter indicated a problem that defied identification. Clearances were checked, and there were no external signs of looseness such as bubbles or oil weeping. Everyone jumped to the usual conclusion—it must be the instrumentation. Another impact transmitter produced exactly the same results. Finally, after much searching, two 11/8 studs were found improperly torqued. When the studs were torqued to their proper value, the impact transmitter returned to normal—an indication of the sensitivity of the technology.

At a compressor site, an operator related an incident where a mechanic was tightening bolts with an impact wrench about 5 ft from the impact transmitter. Although the wrench impacts were not very large compared to those a machine in trouble might produce, the impact system activated and initiated a shutdown.

How it works

The impact transmitter is designed for sensitivity to high amplitude, short duration transient spikes that characterize most potential problems found on reciprocating machinery. These spikes typically do not represent a significant portion of the total energy within a steady state vibration signal. They are lost in the traditional signal processing used for monitoring rotating

machines.

Within the impact transmitter, special peak detection circuitry captures and counts impact events above a threshold value during a specified length of time. This counting method has proven reliable in practice. Transient conditions where impact events appear and go are differentiated from mechanical flaws where impact events appear and stay.

Since the impact transmitter is focused on identifying conditions such as looseness, cracks, and leakage, it is typically mounted on the crosshead or distance piece perpendicular to rod motion. The transmitter produces a 4-20 mA output equivalent to the number of impact events above an adjustable threshold level within a preset time window.

In this configuration, the transmitter is a cost-effective addition to the control and monitoring systems present on most reciprocating machines. It effectively uses the inherent dynamic characteristics of a reciprocating machine to warn and trip in the event of defects such as loose and cracked parts, valve and gasket leaks, and other problems unique to this type machinery. **MT**

Information supplied by Metrix Instrument Co., 1711 Townhurst Dr., Houston, TX 77043; telephone (713) 461-2131.